iDeck | iD 72.42

Electric deck oven for pizza

2 decks composition

iDeck consists of one or two baking chambers and an optional prover or stand. The oven's baking surface is made of refractory material, providing the perfect heat distribution over the whole surface. This oven is particularly suitable for direct or indirect pizza baking. Temperature management is electronic, power control of ceiling and floor is independent. The oven door is hinged at the bottom, with a tempered glass window to check the product during baking. The stand consists of a painted metal structure, while the prover is a stainless steel cabinet equipped with a heating thermostat. The maximum temperature of the baking chamber is 450°C (842°F).

FUNCTIONING

- Heating by armoured heating elements
- Electronic power management with independent adjustment of ceiling and floor (Dual-Power Technology™)
- Maximum temperature reached 842°F (450°C)
- Continuous temperature monitoring with thermocouples

CONSTRUCTION

- Front structure made in folded stainless steel
- Oven panels made pre-painted metal sheets
- Door in stainless steel with shutter with hinge at bottom with balancing spring
- Door handle in stainless steel
- Tempered crystal glass
- Control panel on the right front side
- Baking surface in refractory brick
- Upper and lateral structure in aluminized sheet
- Thermal insulation in mineral wool

BAKING ELEMENT INTERNAL DIMENSIONS

Internal height	5 1/2"
Internal depth	16 1/2"
Internal width	28 1/3"
Baking surface	3,23 ft^2

STANDARD EQUIPMENT

- Illumination by halogen lamp
- Independent maximum temperature safety device (only electronic version)
- Baking timer

ACCESSORIES

- Stand height 23 1/2", 27 1/2", 35 1/2"
- 4 wheels kit
- Additional trayholder slides
- Stand with trayholder slides and castors height 39 5/8"
- Stacking kit
- Hood

TOP VIEW

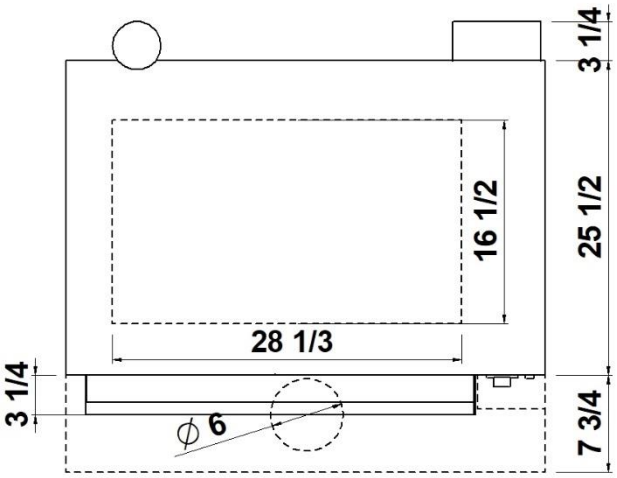

iD-M 72.42

(countertop)

REAR VIEW

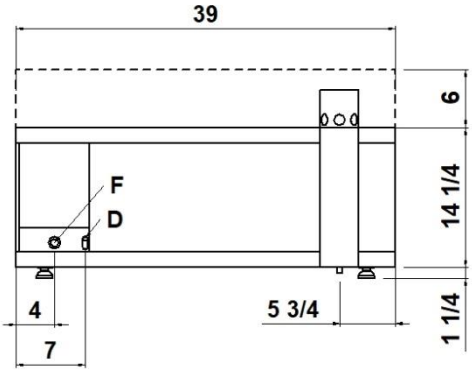

RIGHT VIEW

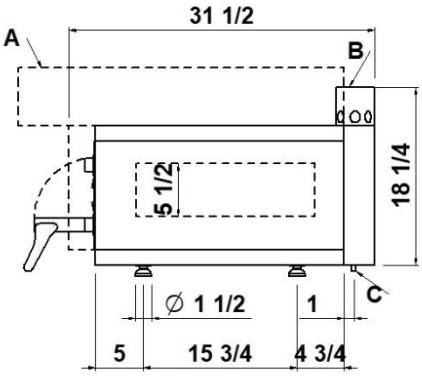

FRONT VIEW

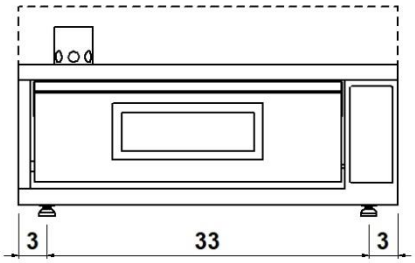

NOTE: The dimensions indicated in the views are in inches. 10ft cable supplied (3ph version only).

A	B	C	D
Ø 5 7/8” hood steam collector	Ø INT. 102 steam exhaust	Ø 1/2” condensate exhaust	M6 equipotential screw
F fairleads			

EXTERNAL DIMENSIONS

External height	18 1/4” (463mm)
External depth	31 1/2” (798 mm)
External width	39” (988mm)
Weight	177lb (80kg)

TOTAL BAKING CAPACITY

Tray 26”x18” (600x400)mm	1
Pizza diameter 14”	2

SHIPPING INFORMATION

Packed oven sizes:

Max Height	16 1/8” (410mm)
Max Depth	33 1/2” (850mm)
Max Width	40 1/2” (1025mm)
Weight	223lb (101kg)

Packed hood sizes:

Height	7” (180mm)
Depth	37 1/2” (950mm)
Width	42” (1060mm)
Weight	39lb (18kg)

FEEDING AND POWER

Standard feeding
A.C. V208 3ph
Feeding on request
A.C. V208 1ph

Frequency	60Hz
Max power	5 kW
*Average power cons	2,5 kWh

Ampère max
14A (V208 3ph)
24A (V208 1ph)
Connecting cable
10AWG/DECK (V208 3ph)
10AWG/DECK (V208 1ph)

*** This value is subject to variation according to the way in which the equipment is used**

NOTE: MORETTI FORNI S.P.A. reserves the right to modify the characteristics of the products illustrated in this publication without prior notice

iD-D 72.42

(countertop)

REAR VIEW

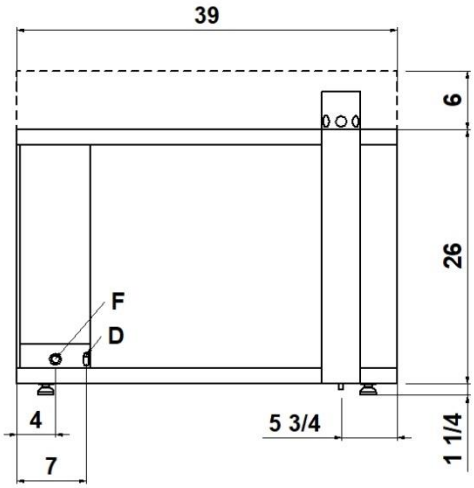

RIGHT VIEW

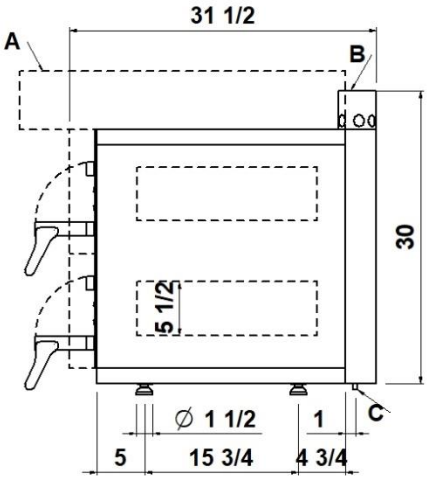

FRONT VIEW

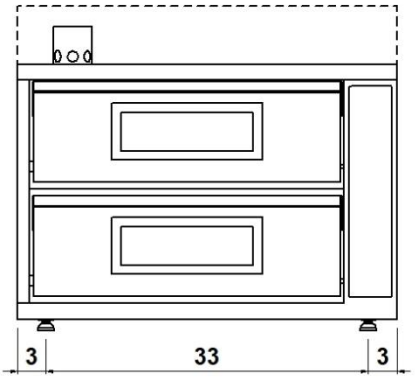

NOTE: The dimensions indicated in the views are in inches. 10ft cable supplied (3ph version only).

A	B	C	D
Ø 5 7/8” hood steam collector	Ø INT. 6 1/4” steam exhaust	Ø 1/2” condensate exhaust	M6 equipotential screw
F fairleads			

EXTERNAL DIMENSIONS

External height	30” (760mm)
External depth	31 1/2” (798 mm)
External width	39” (988mm)
Weigth	286lb (130kg)

TOTAL BAKING CAPACITY

Tray 26”x18” (600x400)mm	2
Pizza diameter 14”	4

SHIPPING INFORMATION

Packed oven sizes:

Max height	28” (710mm)
Max depth	33 1/2” (850mm)
Max width	40 1/2” (1025mm)
Weight	340lb (153kg)

Packed hood sizes:

Height	7” (180mm)
Depth	37 1/2” (950mm)
Width	42” (1060mm)
Weight	39lb (18kg)

FEEDING AND POWER

Standard feeding
A.C. V208 3ph
Feeding on request
A.C. V208 1ph

Frequency	60Hz
Max power	10kW
*Average power cons	5kWh

Ampère max
28A (V208 3ph)
48A (V208 1ph)
Connecting cable
8AWG/DECK (V208 3ph)
6AWG/DECK (V208 1ph)

*** This value is subject to variation according to the way in which the equipment is used**

NOTE: MORETTI FORNI S.P.A. reserves the right to modify the characteristics of the products illustrated in this publication without prior notice

iD-M 72.42

(assembled with stand height 39 5/8”)

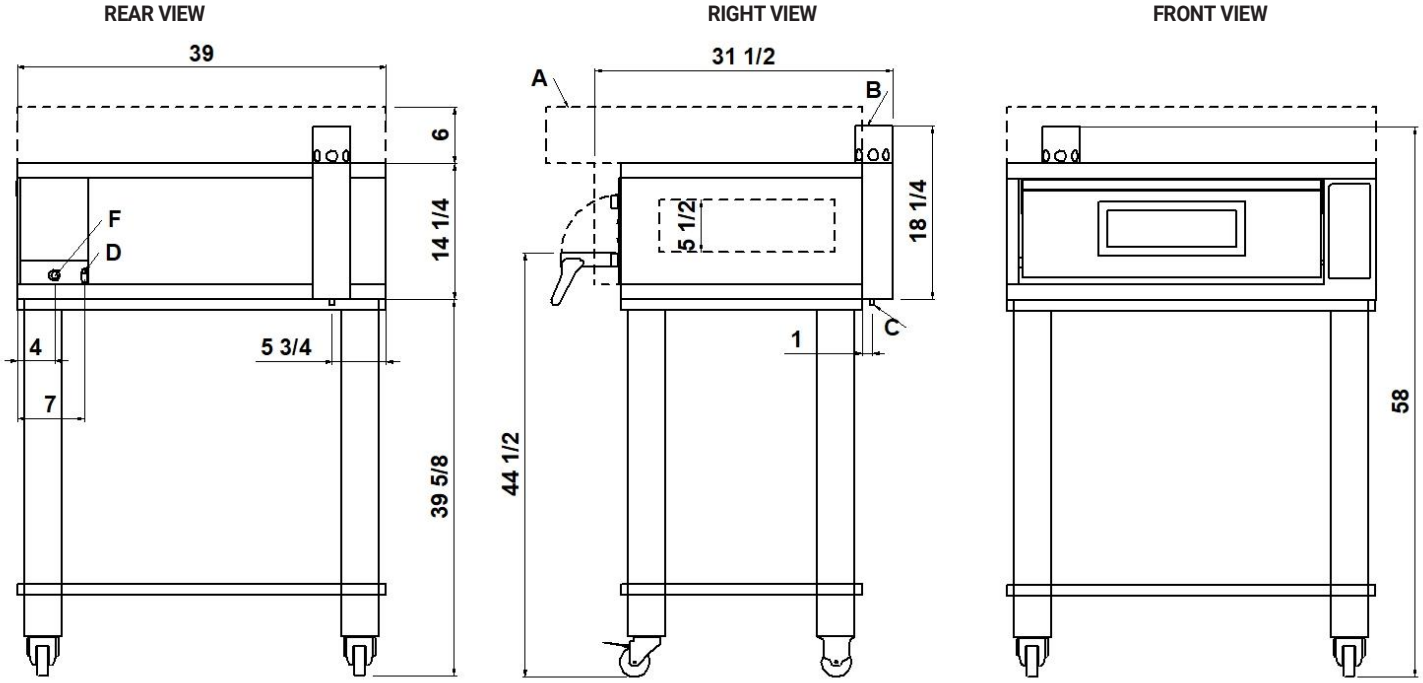

NOTE: The dimensions indicated in the views are in inches. 10ft cable supplied (3ph version only).

A	B	C	D
Ø 5 7/8” hood steam collector	Ø INT. 102 steam exhaust	Ø 1/2” condensate exhaust	M6 equipotential screw
F fairleads			

EXTERNAL DIMENSIONS

External height	18 1/4” (463mm)
External depth	31 1/2” (798 mm)
External width	39” (988mm)
Weight	177lb (80kg)

TOTAL BAKING CAPACITY

Tray 26”x18” (600x400)mm	1
Pizza diameter 14”	2

SHIPPING INFORMATION

Packed oven sizes:

Max Height	16 1/8” (410mm)
Max Depth	33 1/2” (850mm)
Max Width	40 1/2” (1025mm)
Weight	223lb (101kg)

Packed hood sizes:

Height	7” (180mm)
Depth	37 1/2” (950mm)
Width	42” (1060mm)
Weight	39lb (18kg)

FEEDING AND POWER

Standard feeding
A.C. V208 3ph
Feeding on request
A.C. V208 1ph

Frequency	60Hz
Max power	5 kW
*Average power cons	2,5 kWh

Ampère max
14A (V208 3ph)
24A (V208 1ph)

Connecting cable
10AWG/DECK (V208 3ph)
10AWG/DECK (V208 1ph)

*** This value is subject to variation according to the way in which the equipment is used**

NOTE: MORETTI FORNI S.P.A. reserves the right to modify the characteristics of the products illustrated in this publication without prior notice

iD-D 72.42

(assembled with stand height 39 5/8”)

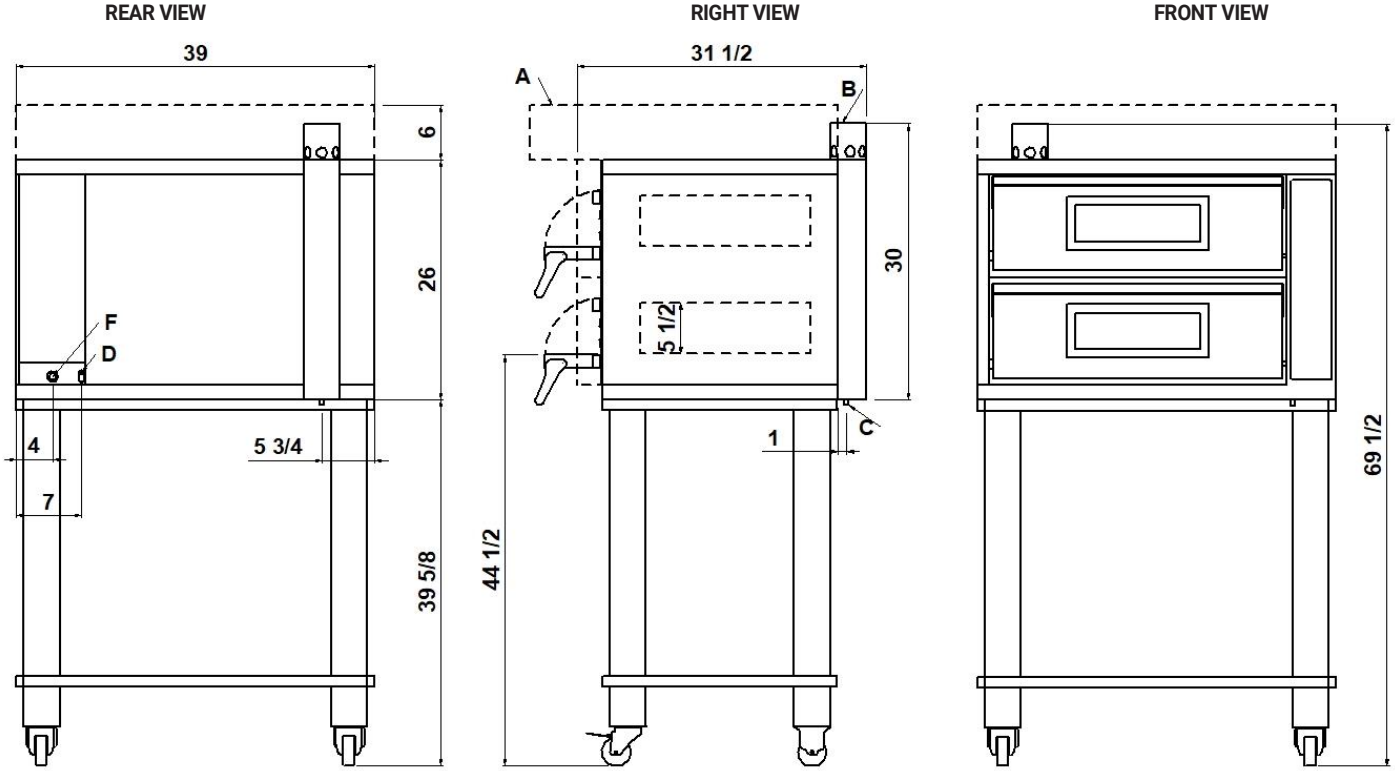

NOTE: The dimensions indicated in the views are in inches. 10ft cable supplied (3ph version only).

A	B	C	D
Ø 5 7/8” hood steam collector	Ø INT. 6 1/4” steam exhaust	Ø 1/2” condensate exhaust	M6 equipotential screw
F fairleads			

EXTERNAL DIMENSIONS

External height	30” (760mm)
External depth	31 1/2” (798 mm)
External width	39” (988mm)
Weigth	286lb (130kg)

TOTAL BAKING CAPACITY

Tray 26”x18” (600x400)mm	2
Pizza diameter 14”	4

SHIPPING INFORMATION

Packed oven sizes:

Max height	28” (710mm)
Max depth	33 1/2” (850mm)
Max width	40 1/2” (1025mm)
Weight	340lb (153kg)

Packed hood sizes:

Height	7” (180mm)
Depth	37 1/2” (950mm)
Width	42” (1060mm)
Weight	39lb (18kg)

FEEDING AND POWER

Standard feeding
A.C. V208 3ph
Feeding on request
A.C. V208 1ph

Frequency	60Hz
Max power	10kW
*Average power cons	5kWh

Ampère max
28A (V208 3ph)
48A (V208 1ph)
Connecting cable
8AWG/DECK (V208 3ph)
6AWG/DECK (V208 1ph)

*** This value is subject to variation according to the way in which the equipment is used**

NOTE: MORETTI FORNI S.P.A. reserves the right to modify the characteristics of the products illustrated in this publication without prior notice