S125E

Modular electric deck oven

2 decks composition

serieS is the most advanced and customizable oven in the world, ideal for **perfect baking of pizza, bakery, pastry, and gastronomy.**
Customize serieS choosing dimensions, number, and type of baking chamber, **material** for baking surface (refractory deck or embossed steel deck), door opening, Steel or Icon finish, and so much more. serieS meets all production needs thanks to specific and integrable baking chambers: **Multi***bake*, **Stone***bake*, **Pastry***bake* and **Steam***bake*. Power consumption reduced by 35% and baking speed increased by 20% are the features that make serieS the evolution of baking; the professional oven for those who want to extend their business with a single tool

OPERATION

- Heated by highly performing armoured heating elements or spiral heating (stonebake)
- Temperature management using P.I.D. permit the automatic energy regulation to the quantity of the baked product Adaptive-Power® Technology
- Separated temperature management of ceiling and floor Dual-Temp® Technology
- Separated power management of ceiling and floor Dual-Power® Technology
- Automatic cleaning program for carbonization
- Maximum temperature reached 842°F
- Continuous temperatures monitoring in baking chamber by 2 thermocouples
- Vapour ducting using manual butterfly valve

CONSTRUCTION

- Structure made in folded stainless steel
- Side panels in painted sheet metal
- Channel hood
- Steam duct in stainless steel plate
- Stainless steel door, panoramic glass element, door handle in stainless steel
- Aluminated steel top and side structure or refractory (stonebake)
- Refractory brick baking surface
- Double LED light
- Rock wool heat insulation

ACCESSORIES

- Leavening proofer on wheels height 23 1/2", 31 1/2"
- Stand with wheels height 15 3/4", 23 1/2", 31 1/2", 37 1/2", 41 1/2"
- Spacer element height 11 13/16"
- Refractory brick or buckle plate surface
- Additional tray holder guides for compartment and stand
- Max power optimizer (Fource®/Fource+®Technology)
- Door opening from bottom to top
- Lateral tool-holder for compartment
- Oversized hood, frontless hood
- Remote-Master® Technology
- Gasket kit for door with standard opening

INTERNAL BAKING DIMENSIONS

Internal height	6 1/4" – 8 1/2"
Internal depth	49 3/4"
Internal widht	49"
Baking surface	16,1ft²

STANDARD EQUIPMENT

- Color multilanguage display TFT 5"
- 100 customized programs with baking steps
- Eco-Standby BY™ Technology for break
- Power-Booster™ Technology for workload peaks
- Half-Load™ Technology for partial load
- Front and rear power balance Delta-Power™ Technology
- Customized Hotkey with recurring control
- Self-diagnosis with error message display
- Independent double baking Timer and Multitimer
- Weekly Timer with the possibility to program two lightings and two power off every day
- Independent security device of maximum temperature
- USB input and WiFi module for sw update
- SmartBaking app

TOP VIEW

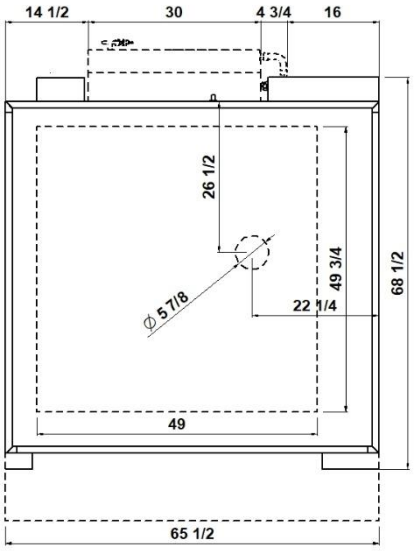

1 baking chamber height 6 1/4”

(assembled with stand height 37 1/2”)

REAR VIEW

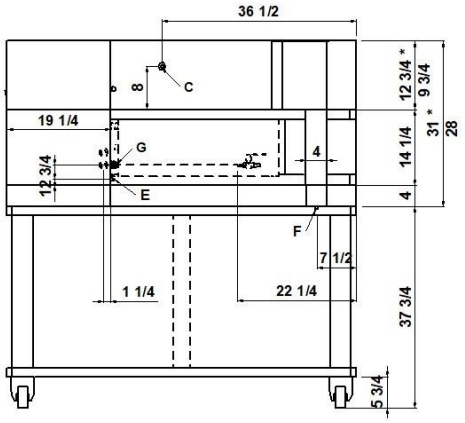

RIGHT SIDE VIEW

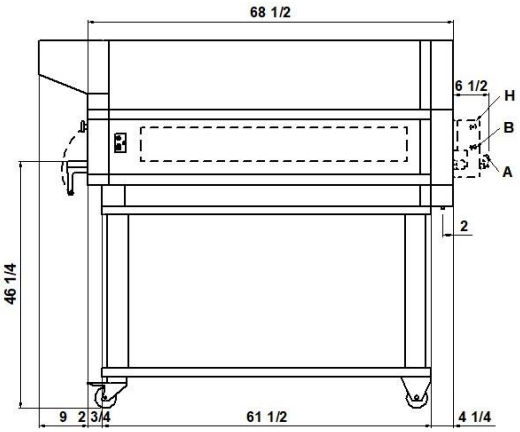

FRONT VIEW

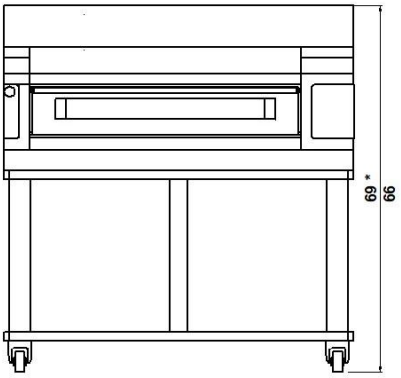

NOTE: The dimensions indicated in the views are in inches. * Dimensions refer to the ICON hood and STEEL oversized hood.

A	B	C	
Ø 5/16” steamer water outlet	3/4” male steamer water inlet	Ø 5/8” Hood condensate exhaust	
E	**F**	**G**	**H**
M6 equipotential screws	Ø12 condensate exhaust	fairleads	Steamer 3480W (see data sheet)

DIMENSIONS

External height	18” (460mm)
External depth	68 1/2” (1738mm)
External width	65 1/2” (1660mm)
Weight	849lb (385kg)

TOTAL BAKING CAPACITY

Tray 26”x18” (600x400)mm	6
Pizza diameter 14”	10
Pizza diameter 18”	6

SHIPPING INFORMATION

Packed in wooden crate

Height	34” (860mm)
Depth	87” (2173mm)
Width	74” (1870mm)
Weight	959lb (435kg)

When combined with proofer or stand:

Max height	76” (1940mm)
Max weight	1354lb (610kg)

FEEDING AND POWER

Standard feeding
A.C. V208 3ph

Frequency	60Hz
Max power	17,3kW/DECK
*Average power cons	5,2kWh
Ampère max	49A/DECK (V208 3ph)

Connecting cable for each chamber
8AWG/DECK

Power supply (optional proofer)
A.C. V(208/240) 1ph 60Hz

Max power	1,8kW
*Average power cons	0,9kWh

Conn. Cable 16AWG – Ampère 7,5A

*** This value is subject to variation according to the way in which the equipment is used**

NOTE: MORETTI FORNI S.P.A. reserves the right to modify the characteristics of the products illustrated in this publication without prior notice

S125E

2 baking chambers height 6 1/4”

(assembled with proofer height 31 1/2”)

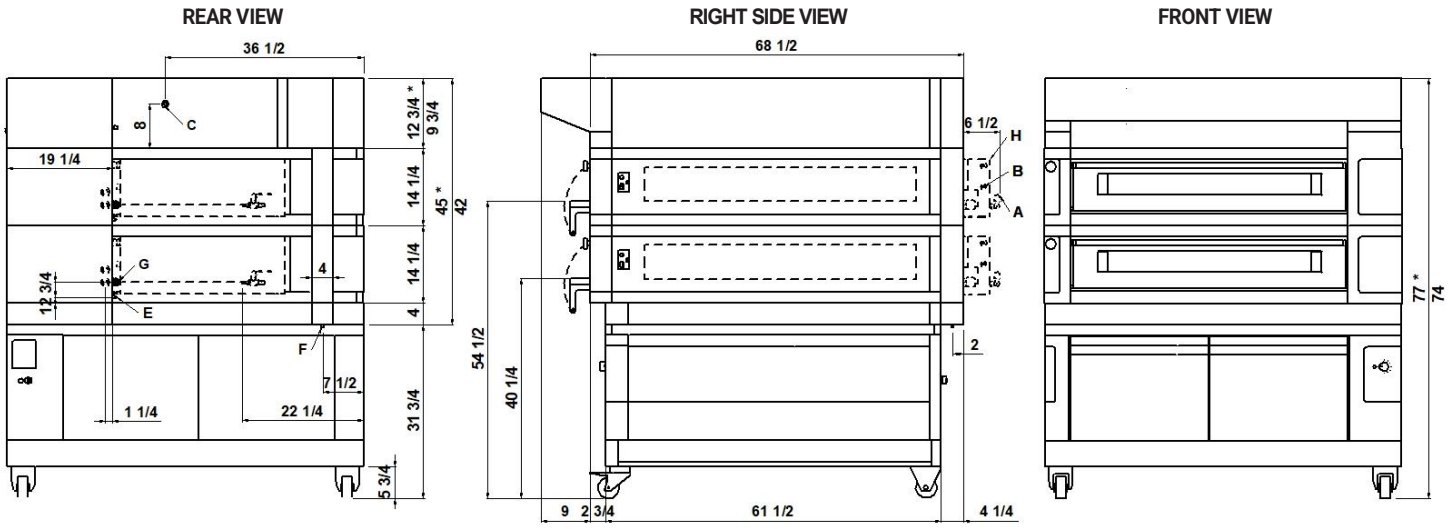

NOTE: The dimensions indicated in the views are in inches. * Dimensions refer to the ICON hood and STEEL oversized hood.

A Ø 5/16” steamer water outlet	**B** 3/4” male steamer water inlet	**C** Ø 5/8” Hood condensate exhaust	
E M6 equipotential screws	**F** Ø12 condensate exhaust	**G** fairleads	**H** Steamer 3480W (see data sheet)

DIMENSIONS

External height	32 1/4” (820mm)
External depth	68 1/2” (1738mm)
External width	65 1/2” (1660mm)
Weight	1387lb (629kg)

TOTAL BAKING CAPACITY

Tray 26”x18” (600x400)mm	12
Pizza diameter 14”	20
Pizza diameter 18”	12

SHIPPING INFORMATION

Packed in wooden crate

Height	48” (1220mm)
Depth	87” (2173mm)
Width	74” (1870mm)
Weight	1519lb (689kg)

When combined with proofer or stand:

Max height	85” (2150mm)
Max weight	1905lb (864kg)

FEEDING AND POWER

Standard feeding
A.C. V208 3ph

Frequency	60Hz
Max power	17,3kW/DECK
*Average power cons	5,2kWh

Ampère max
49A/DECK (V208 3ph)

Connecting cable for each chamber
8AWG/DECK

Power supply (optional proofer)
A.C. V(208/240) 1ph 60Hz

Max power	1,8kW
*Average power cons	0,9kWh

Conn. Cable 16AWG – Ampère 7,5A

*** This value is subject to variation according to the way in which the equipment is used**

NOTE: MORETTI FORNI S.P.A. reserves the right to modify the characteristics of the products illustrated in this publication without prior notice

S125E

3 baking chambers height 6 1/4”

(assembled with proofer height 23 1/2”)

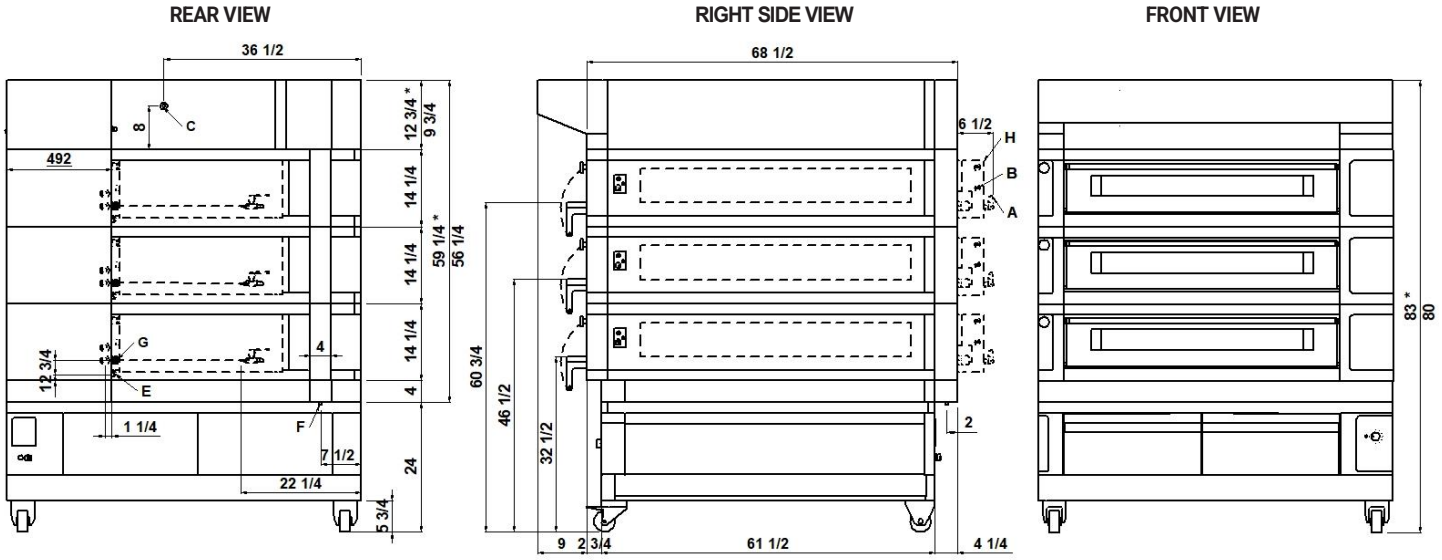

NOTE: The dimensions indicated in the views are in inches. * Dimensions refer to the ICON hood and STEEL oversized hood.

A	B	C	
Ø 5/16” steamer water outlet	3/4” male steamer water inlet	Ø 5/8” Hood condensate exhaust	
E	**F**	**G**	**H**
M6 equipotential screws	Ø12 condensate exhaust	fairleads	Steamer 3480W (see data sheet)

DIMENSIONS

External height	38” (960mm)
External depth	68 1/2” (1738mm)
External width	65 1/2” (1660mm)
Weight	1925lb (873kg)

TOTAL BAKING CAPACITY

Tray 26”x18” (600x400)mm	18
Pizza diameter 14”	30
Pizza diameter 18”	18

SHIPPING INFORMATION

Packed in wooden crate

Height	62” (1580mm)
Depth	87” (2173mm)
Width	74” (1870mm)
Weight	2079lb (943kg)

When combined with proofer or stand:

Max height	91” (2310mm)
Max weight	2432lb (1103kg)

FEEDING AND POWER

Standard feeding
A.C. V208 3ph

Frequency	60Hz
Max power	17,3kW/DECK
*Average power cons	5,2kWh
Ampère max	49A/DECK (V208 3ph)

Connecting cable for each chamber
8AWG/DECK

Power supply (optional proofer)
A.C. V(208/240) 1ph 60Hz

Max power	1,8kW
*Average power cons	0,9kWh

Conn. Cable 16AWG – Ampère 7,5A

*** This value is subject to variation according to the way in which the equipment is used**

NOTE: MORETTI FORNI S.P.A. reserves the right to modify the characteristics of the products illustrated in this publication without prior notice

2 baking chambers height 6 1/4” + 8 1/2”

(assembled with proofer height 31 1/2”)

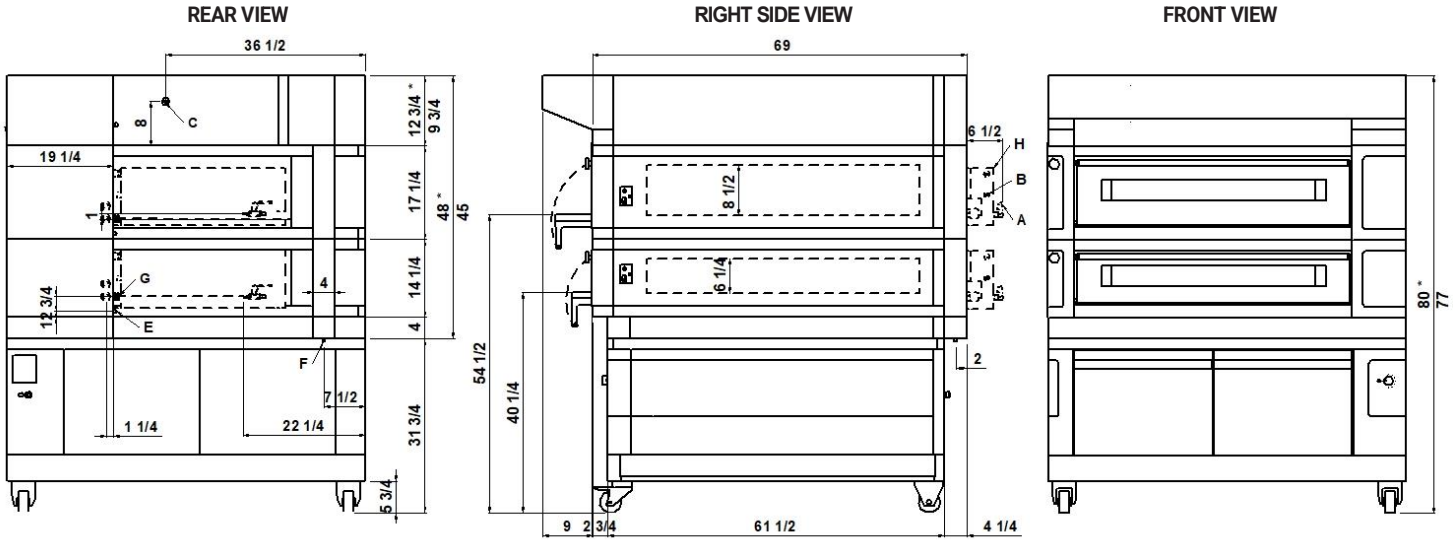

NOTE: The dimensions indicated in the views are in inches. * Dimensions refer to the ICON hood and STEEL oversized hood.

A Ø 5/16” steamer water outlet	**B** 3/4” male steamer water inlet	**C** Ø 5/8” Hood condensate exhaust	
E M6 equipotential screws	**F** Ø12 condensate exhaust	**G** fairleads	**H** Steamer 3480W (see data sheet)

DIMENSIONS

External height	35 1/4” (895mm)
External depth	68 1/2” (1738mm)
External width	65 1/2” (1660mm)
Weight	1444lb (655kg)

TOTAL BAKING CAPACITY

Tray 26”x18” (600x400)mm	12
Pizza diameter 14”	20
Pizza diameter 18”	12

SHIPPING INFORMATION

Packed in wooden crate

Height	51” (1300mm)
Depth	87” (2173mm)
Width	74” (1870mm)
Weight	1576lb (715kg)

When combined with proofer or stand:

Max height	88” (2230mm)
Max weight	1905lb (864kg)

FEEDING AND POWER

Standard feeding
A.C. V208 3ph

Frequency	60Hz
Max power	17,3kW/DECK
*Average power cons	5,2kWh
Ampère max	49A/DECK (V208 3ph)

Connecting cable for each chamber
8AWG/DECK

Power supply (optional proofer)
A.C. V(208/240) 1ph 60Hz

Max power	1,8kW
*Average power cons	0,9kWh

Conn. Cable 16AWG – Ampère 7,5A

*** This value is subject to variation according to the way in which the equipment is used**

NOTE: MORETTI FORNI S.P.A. reserves the right to modify the characteristics of the products illustrated in this publication without prior notice

S125E

3 baking chambers height 6 1/4” + 6 1/4” + 8 1/2”

(assembled with proofer height 23 1/2”)

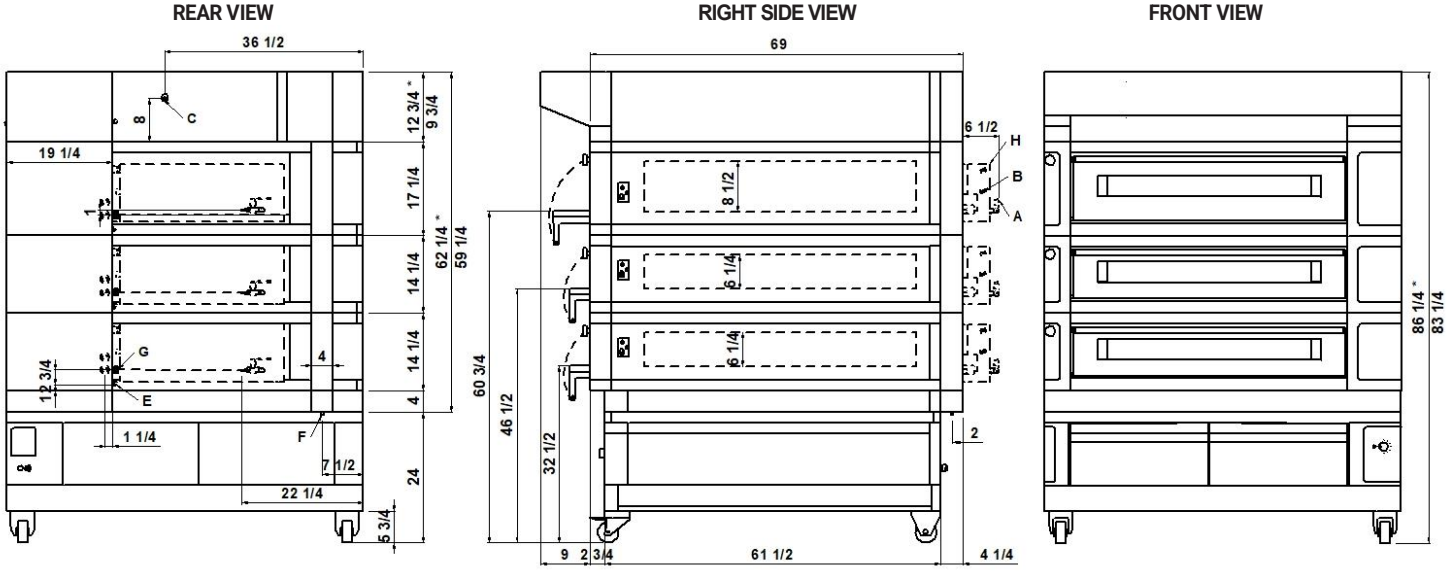

NOTE: The dimensions indicated in the views are in inches. * Dimensions refer to the ICON hood and STEEL oversized hood.

A Ø 5/16” steamer water outlet	**B** 3/4” male steamer water inlet	**C** Ø 5/8” Hood condensate exhaust	
E M6 equipotential screws	**F** Ø12 condensate exhaust	**G** fairleads	**H** Steamer 3480W (see data sheet)

DIMENSIONS

External height	49 1/2” (1255mm)
External depth	68 1/2” (1738mm)
External width	65 1/2” (1660mm)
Weight	2035lb (923kg)

TOTAL BAKING CAPACITY

Tray 26”x18” (600x400)mm	18
Pizza diameter 14”	30
Pizza diameter 18”	18

SHIPPING INFORMATION

Packed in wooden crate

Height	71” (1800mm)
Depth	87” (2173mm)
Width	74” (1870mm)
Weight	2211lb (1003kg)

When combined with proofer or stand:

Max height	94” (2390mm)
Max weight	2432lb (1103kg)

FEEDING AND POWER

Standard feeding
A.C. V208 3ph

Frequency	60Hz
Max power	17,3kW/DECK
*Average power cons	5,2kWh

Ampère max
49A/DECK (V208 3ph)

Connecting cable for each chamber
8AWG/DECK

Power supply (optional proofer)
A.C. V(208/240) 1ph 60Hz

Max power	1,8kW
*Average power cons	0,9kWh

Conn. Cable 16AWG – Ampère 7,5A

*** This value is subject to variation according to the way in which the equipment is used**

NOTE: MORETTI FORNI S.P.A. reserves the right to modify the characteristics of the products illustrated in this publication without prior notice

3 baking chambers height 6 1/4”

S125 MODEL (Steel finish)

(assembled with stand height 15 3/4”)

RIGHT SIDE VIEW

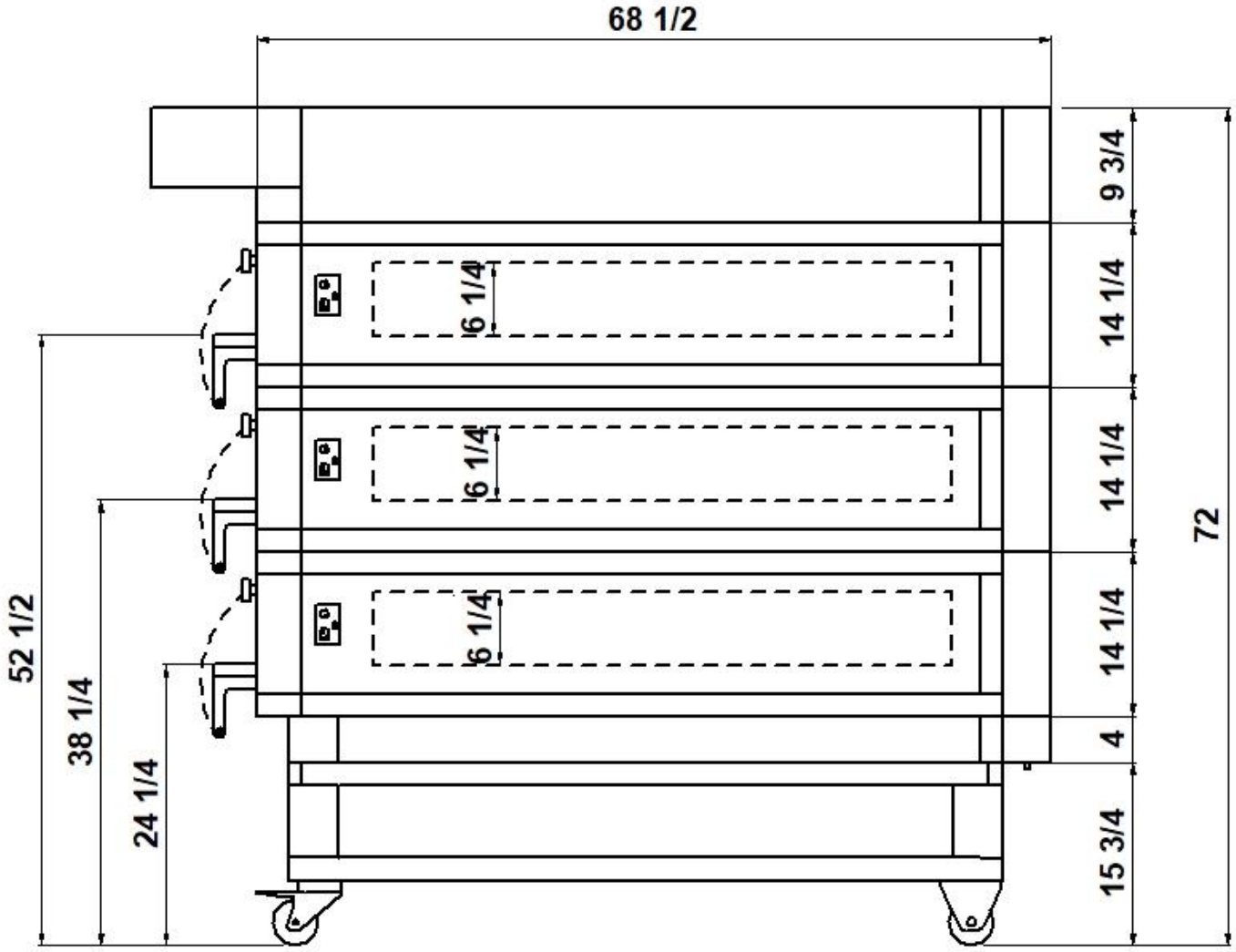

NOTE: The dimensions indicated in the views are in inches.

*** This value is subject to variation according to the way in which the equipment is used**

NOTE: MORETTI FORNI S.P.A. reserves the right to modify the characteristics of the products illustrated in this publication without prior notice

S125

TECHNICAL DATA

SHIPPING INFORMATION H6 1/4”		S125E_1	S125E_2	S125E_3
Packed in wooden crate	Height	34” (860mm)	48”(1220mm)	62”(1580mm)
	Icon height	38” (960mm)	52”(1320mm)	66”(1680mm)
	Weight	959lb (435kg)	1519lb (689kg)	2079lb (943kg)
When combined with proofer or Stand	Max. height	73”(1860mm)	82”(2070mm)	88”(2230mm)
	Max. icon height	76”(1940mm)	85”(2150mm)	91”(2280mm)
	Max. weight	1345lb (610kg)	1905lb (864kg)	2432lb (1103)kg)
SHIPPING INFORMATION H8 1/2”		**S125E_1**	**S125E_2**	**S125E_3**
Packed in wooden crate	Height	38”(950mm)	56”(1400mm)	73”(1850mm)
	Icon height	41”(1050mm)	69”(1500mm)	76”(1950mm)
	Weight	994lb (451kg)	1590lb (721kg)	2185lb (991kg)
When combined with proofer or Stand	Max. height	76”(1950mm)	89”(2250mm)	99” (2500mm)
	Max. icon height	79”(2030mm)	92”(2330mm)	102”(2580mm)
	Max. weight	1380lb (626kg)	1975lb (896kg)	2538lb (1151kg)
SHIPPING INFORMATION STONEBAKE		**S125R_1**	**S125R_2**	**S125R_3**
Packed in wooden crate	Height	34” (860mm)	48”(1220mm)	62”(1580mm)
	Icon height	38” (960mm)	52”(1320mm)	66”(1680mm)
	Weight	1340lb (608kg)	2216lb (1005kg)	3091lb (1402kg)
When combined with proofer or Stand	Max. height	73”(1860mm)	82”(2070mm)	88”(2230mm)
	Max. icon height	76”(1940mm)	85”(2150mm)	91”(2280mm)
	Max. weight	1726lb (783kg)	2601lb (1180kg)	3444lb (1562kg)

FEEDING AND POWER (EACH DECK NEEDS TO BE CONNECTED INDEPENDENTLY AND THE LOAD SHOWN BELOW ARE PER DECK)	A.C. V208 3ph 60Hz	Multibake /Stonebake	Max power	kW	17,3
			*Medium cons/hour	kWh	5,2/5,5
			Ampère Max	A/DECK	49
			Connecting cable	AWG/DECK	8
	A.C. V208 3ph 60Hz	Steambake	Max power	kW	15,3
			*Medium cons/hour	kWh	4,5
			Ampère Max	A/DECK	43
			Connecting cable	AWG/DECK	6
	A.C. V208 3ph 60Hz	Pastrybake	Max power	kW	11,8
			*Medium cons/hour	kWh	3,5
			Ampère Max	A/DECK	33
			Connecting cable	AWG/DECK	6
	A.C. V(208/240) 1ph 60Hz	Proofer	Max power	kW	1,8
			*Medium cons/hour	kWh	0,9
			Ampère Max	A/DECK	7,5
			Connecting cable	AWG/DECK	16

MAX TEMPERATURE	Multibake/Stonebake	°F/°C	842°F	450°C
	Steambake		662°F	350°C
	Pastrybake		518°F	270°C

Max power with Fource® Technology on average -20%
Max power with Fource+® Technology (specific for bakery) on average -50%

*** This value is subject to variation according to the way in which the equipment is used**

NOTE: MORETTI FORNI S.P.A. reserves the right to modify the characteristics of the products illustrated in this publication without prior notice