S100E

Modular electric deck oven

2 decks composition

serieS is the most advanced and customizable oven in the world, ideal for **perfect baking of pizza, bakery, pastry, and gastronomy.**
Customize serieS choosing dimensions, number, and type of baking chamber, **material** for baking surface (refractory deck or embossed steel deck), door opening, Steel or Icon finish, and so much more. serieS meets all production needs thanks to specific and integrable baking chambers: **Multi***bake*, **Stone***bake*, **Pastry***bake* and **Steam***bake*. Power consumption reduced by 35% and baking speed increased by 20% are the features that make serieS the evolution of baking; the professional oven for those who want to extend their business with a single tool

OPERATION

- Heated by highly performing armoured heating elements or spiral heating (stonebake)
- Temperature management using P.I.D. permit the automatic energy regulation to the quantity of the baked product Adaptive-Power® Technology
- Separated temperature management of ceiling and floor Dual-Temp® Technology
- Separated power management of ceiling and floor Dual-Power® Technology
- Automatic cleaning program for carbonization
- Maximum temperature reached 842°F
- Continuous temperatures monitoring in baking chamber by 2 thermocouples
- Vapour ducting using manual butterfly valve

CONSTRUCTION

- Structure made in folded stainless steel
- Side panels in painted sheet metal
- Channel hood
- Steam duct in stainless steel plate
- Stainless steel door, panoramic glass element, door handle in stainless steel
- Aluminated steel top and side structure or refractory (stonebake)
- Refractory brick baking surface
- Double LED light
- Rock wool heat insulation

ACCESSORIES

- Leavening proofer on wheels height 23 1/2", 31 1/2"
- Stand with wheels height 15 3/4", 23 1/2", 31 1/2", 37 1/2", 41 1/2"
- Spacer element height 11 13/16"
- Refractory brick or buckle plate surface
- Additional tray holder guides for compartment and stand
- Max power optimizer (Fource®/Fource+®Technology)
- Door opening from bottom to top
- Lateral tool-holder for compartment
- Oversized hood, frontless hood
- Remote-Master® Technology
- Gasket kit for door with standard opening

INTERNAL BAKING DIMENSIONS

Internal height	6 1/4" – 8 1/2"
Internal depth	29"
Internal widht	37 1/2"
Baking surface	7,5ft^2

STANDARD EQUIPMENT

- Color multilanguage display TFT 5"
- 100 customized programs with baking steps
- Eco-Standby BY™ Technology for break
- Power-Booster™ Technology for workload peaks
- Half-Load™ Technology for partial load
- Front and rear power balance Delta-Power™ Technology
- Customized Hotkey with recurring control
- Self-diagnosis with error message display
- Independent double baking Timer and Multitimer
- Weekly Timer with the possibility to program two lightings and two power off every day
- Independent security device of maximum temperature
- USB input and WiFi module for sw update
- SmartBaking app

TOP VIEW

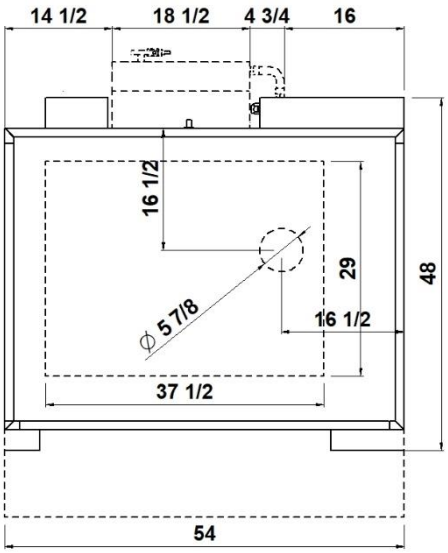

1 baking chamber height 6 1/4”

(assembled with stand height 37 1/2”)

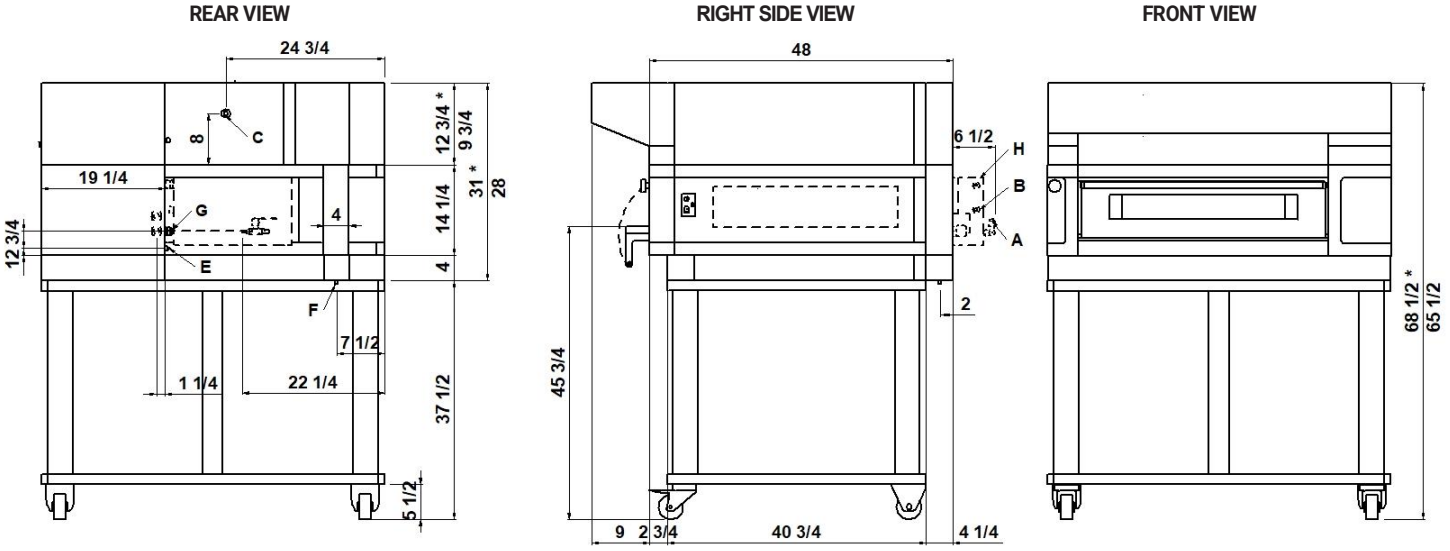

NOTE: The dimensions indicated in the views are in inches. * Dimensions refer to the ICON hood and STEEL oversized hood.

A Ø 5/16” steamer water outlet	**B** 3/4” male steamer water inlet	**C** Ø 5/8” hood condensate exhaust	
E M6 equipotential screws	**F** Ø 1/2” condensate exhaust	**G** fairleads	**H** Steamer 1740W (see data sheet)

DIMENSIONS

External height	18” (460mm)
External depth	48” (1208mm)
External width	54” (1365mm)
Weight	516lb (234kg)

TOTAL BAKING CAPACITY

Tray 26”x18” (600x400)mm	2
Pizza diameter 14”	4
Pizza diameter 18”	2

SHIPPING INFORMATION

Packed in wooden crate

Height	34” (860mm)
Depth	65” (1643mm)
Width	62” (1575mm)
Weight	626lb (284kg)

When combined with proofer or stand:

Max height	76” (1940mm)
Max weight	853lb (387kg)

FEEDING AND POWER

Standard feeding
A.C. V208 3ph
Feeding on request
A.C. V208 1ph

Frequency	60Hz
Max power	9kW/DECK
*Average power cons	2,7kWh

Ampère max
25A/DECK (V208 3ph)
44A/DECK (V208 1ph)
Connecting cable for each chamber
10AWG/DECK (V208 3ph)
8AWG/DECK (V208 1ph)
Power supply (optional proofer)
A.C. V(208/240) 1ph 60Hz

Max power	1,8kW
*Average power cons	0,9kWh

Conn. Cable 16AWG – Ampère 7,5A

*** This value is subject to variation according to the way in which the equipment is used**

NOTE: MORETTI FORNI S.P.A. reserves the right to modify the characteristics of the products illustrated in this publication without prior notice

2 baking chambers height 6 1/4”

(assembled with proofer height 31 1/2”)

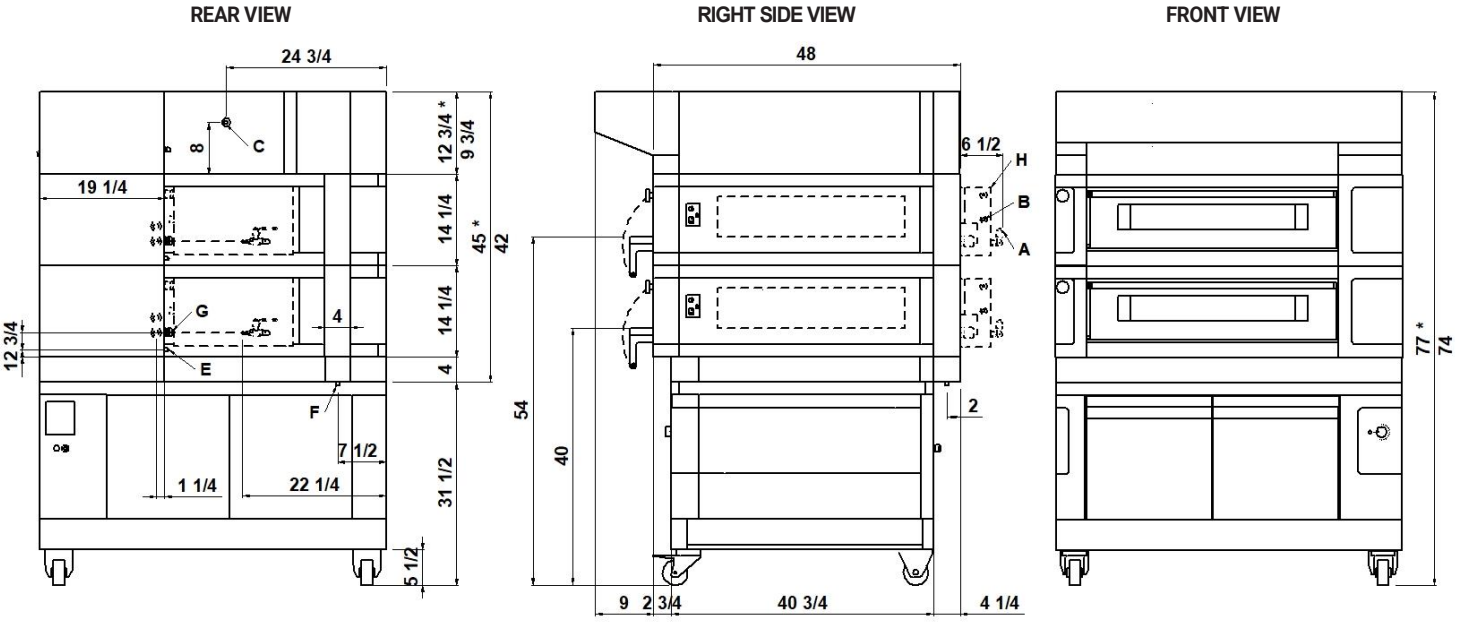

NOTE: The dimensions indicated in the views are in inches. * Dimensions refer to the ICON hood and STEEL oversized hood.

A	B	C	
Ø 5/16” steamer water outlet	3/4” male steamer water inlet	Ø 5/8” Hood condensate exhaust	
E	**F**	**G**	**H**
M6 equipotential screws	Ø 1/2” condensate exhaust	fairleads	Steamer 1740W (see data sheet)

DIMENSIONS

External height	32 1/4” (820mm)
External depth	48” (1208mm)
External width	54” (1365mm)
Weight	845lb (383kg)

TOTAL BAKING CAPACITY

Tray 26”x18” (600x400)mm	4
Pizza diameter 14”	8
Pizza diameter 18”	4

SHIPPING INFORMATION

Packed in wooden crate

Height	48” (1220mm)
Depth	65” (1643mm)
Width	62” (1575mm)
Weight	977lb (443kg)

When combined with proofer or stand:

Max height	85” (2150mm)
Max weight	1204lb (546kg)

FEEDING AND POWER

Standard feeding
A.C. V208 3ph
Feeding on request
A.C. V208 1ph

Frequency	60Hz
Max power	9kW/DECK
*Average power cons	2,7kWh

Ampère max
25A/DECK (V208 3ph)
44A/DECK (V208 1ph)
Connecting cable for each chamber
10AWG/DECK (V208 3ph)
8AWG/DECK (V208 1ph)
Power supply (optional proofer)
A.C. V(208/240) 1ph 60Hz

Max power	1,8kW
*Average power cons	0,9kWh

Conn. Cable 16AWG – Ampère 7,5A

*** This value is subject to variation according to the way in which the equipment is used**

NOTE: MORETTI FORNI S.P.A. reserves the right to modify the characteristics of the products illustrated in this publication without prior notice

3 baking chambers height 6 1/4”

(assembled with proofer height 23 1/2”)

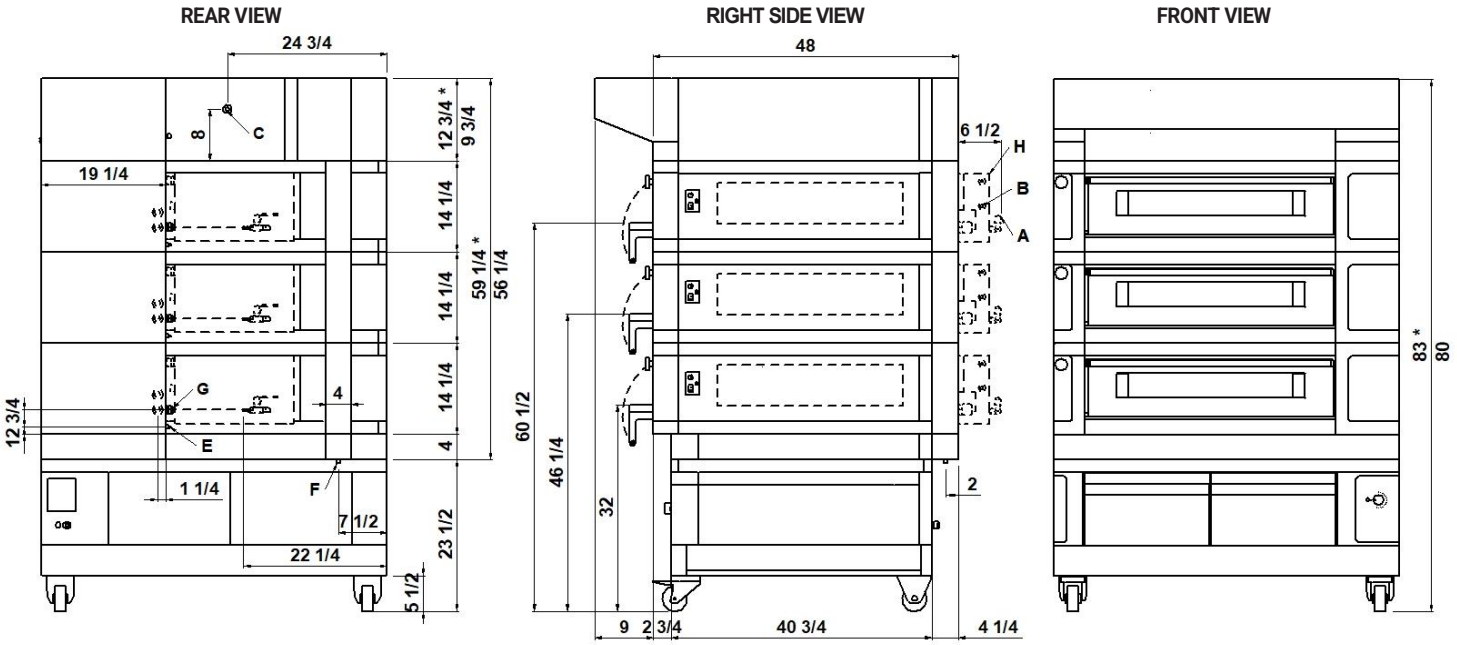

NOTE: The dimensions indicated in the views are in inches. * Dimensions refer to the ICON hood and STEEL oversized hood.

A	B	C	
Ø 5/16” steamer water outlet	3/4” male steamer water inlet	Ø 5/8” Hood condensate exhaust	
E	**F**	**G**	**H**
M6 equipotential screws	Ø 1/2” condensate exhaust	fairleads	Steamer 1740W (see data sheet)

DIMENSIONS

External height	46 1/2”(1180mm)
External depth	48” (1208mm)
External width	54” (1365mm)
Weight	1173lb (532kg)

TOTAL BAKING CAPACITY

Tray 26”x18” (600x400)mm	6
Pizza diameter 14”	12
Pizza diameter 18”	6

SHIPPING INFORMATION

Packed in wooden crate

Height	62” (1580mm)
Depth	65” (1643mm)
Width	62” (1575mm)
Weight	1327lb (602kg)

When combined with proofer or stand:

Max height	91” (2310mm)
Max weight	1535lb (696kg)

FEEDING AND POWER

Standard feeding
A.C. V208 3ph
Feeding on request
A.C. V208 1ph

Frequency	60Hz
Max power	9kW/DECK
*Average power cons	2,7kWh

Ampère max
25A/DECK (V208 3ph)
44A/DECK (V208 1ph)
Connecting cable for each chamber
10AWG/DECK (V208 3ph)
8AWG/DECK (V208 1ph)
Power supply (optional proofer)
A.C. V(208/240) 1ph 60Hz

Max power	1,8kW
*Average power cons	0,9kWh

Conn. Cable 16AWG – Ampère 7,5A

*** This value is subject to variation according to the way in which the equipment is used**

NOTE: MORETTI FORNI S.P.A. reserves the right to modify the characteristics of the products illustrated in this publication without prior notice

2 baking chambers height 6 1/4” + 8 1/2”

(assembled with proofer height 31 1/2”)

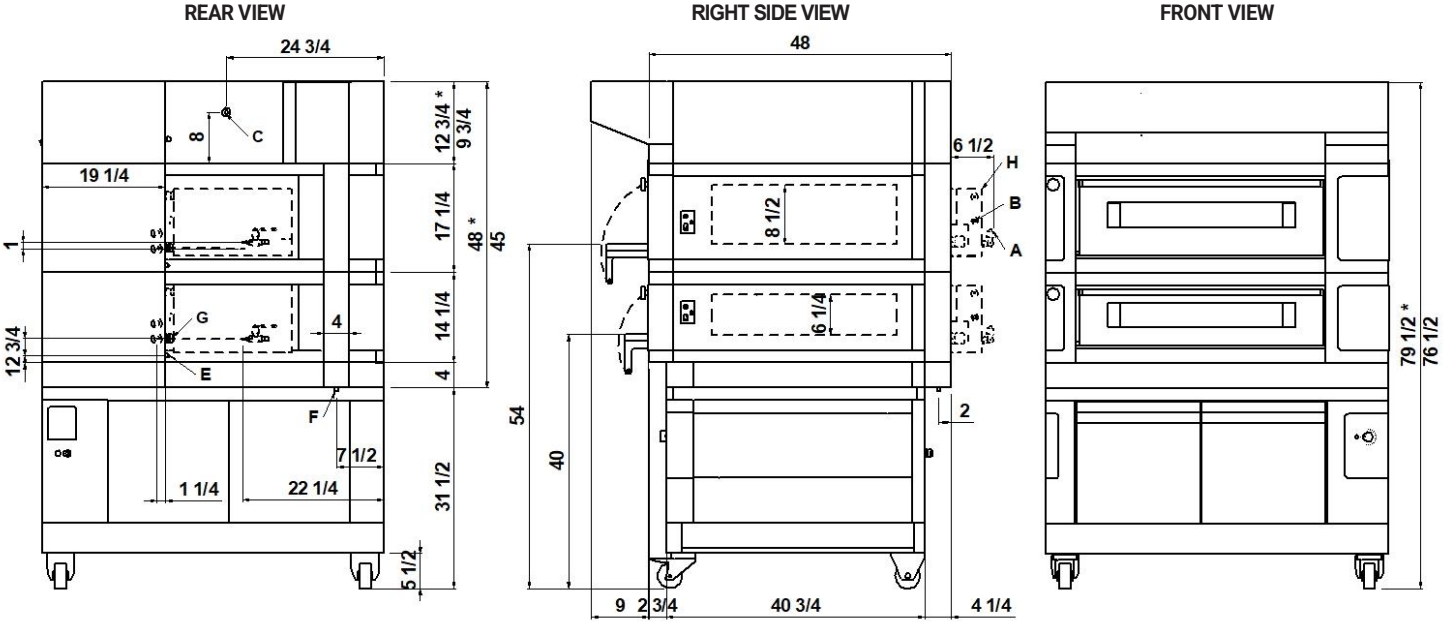

NOTE: The dimensions indicated in the views are in inches. * Dimensions refer to the ICON hood and STEEL oversized hood.

A	B	C	
Ø 5/16” steamer water outlet	3/4” male steamer water inlet	Ø 5/8” Hood condensate exhaust	
E	**F**	**G**	**H**
M6 equipotential screws	Ø 1/2” condensate exhaust	fairleads	Steamer 1740W (see data sheet)

DIMENSIONS

External height	35 1/4” (895mm)
External depth	48” (1208mm)
External width	54” (1365mm)
Weight	882lb (400kg)

TOTAL BAKING CAPACITY

Tray 26”x18” (600x400)mm	4
Pizza diameter 14”	8
Pizza diameter 18”	4

SHIPPING INFORMATION

Packed in wooden crate

Height	51”(1300mm)
Depth	65” (1643mm)
Width	62” (1575mm)
Weight	1014lb (460kg)

When combined with proofer or stand:

Max height	88” (2230mm)
Max weight	1301lb (590kg)

FEEDING AND POWER

Standard feeding
A.C. V208 3ph
Feeding on request
A.C. V208 1ph

Frequency	60Hz
Max power	9kW/DECK
*Average power cons	2,7kWh

Ampère max
25A/DECK (V208 3ph)
44A/DECK (V208 1ph)
Connecting cable for each chamber
10AWG/DECK (V208 3ph)
8AWG/DECK (V208 1ph)
Power supply (optional proofer)
A.C. V(208/240) 1ph 60Hz

Max power	1,8kW
*Average power cons	0,9kWh

Conn. Cable 16AWG – Ampère 7,5A

*** This value is subject to variation according to the way in which the equipment is used**

NOTE: MORETTI FORNI S.P.A. reserves the right to modify the characteristics of the products illustrated in this publication without prior notice

S100E

3 baking chambers height 6 1/4” + 6 1/4” + 8 1/2”

(assembled with proofer height 23 1/2”)

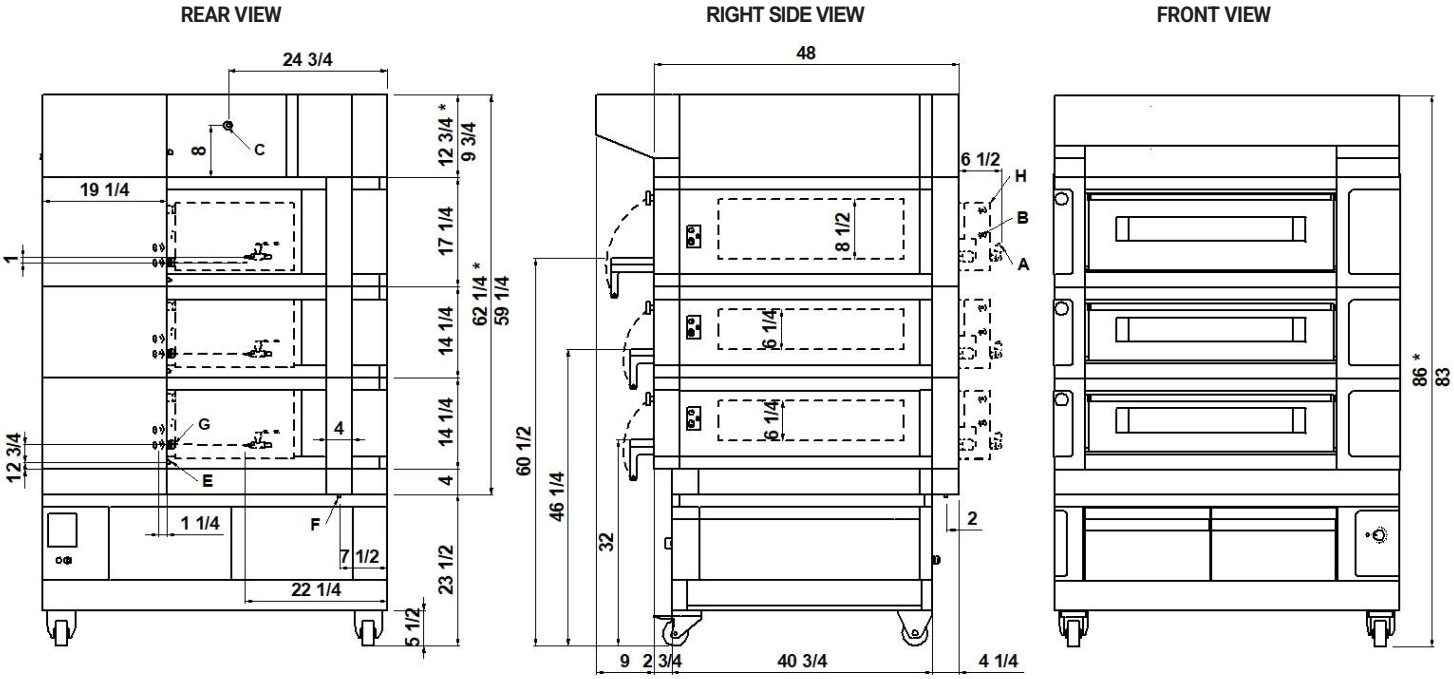

NOTE: The dimensions indicated in the views are in inches. * Dimensions refer to the ICON hood and STEEL oversized hood.

A	B	C	
Ø 5/16” steamer water outlet	3/4” male steamer water inlet	Ø 5/8” Hood condensate exhaust	
E	**F**	**G**	**H**
M6 equipotential screws	Ø12 condensate exhaust	fairleads	Steamer 1740W (see data sheet)

DIMENSIONS

External height	49 1/2” (1255mm)
External depth	48” (1208mm)
External width	54” (1365mm)
Weight	1235lb (560kg)

TOTAL BAKING CAPACITY

Tray 26”x18” (600x400)mm	6
Pizza diameter 14”	12
Pizza diameter 18”	6

SHIPPING INFORMATION

Packed in wooden crate

Height	71”(1800mm)
Depth	65” (1643mm)
Width	62” (1575mm)
Weight	1389lb (630kg)

When combined with proofer or stand:

Max height	94” (2390mm)
Max weight	1599lb (725kg)

FEEDING AND POWER

Standard feeding
A.C. V208 3ph
Feeding on request
A.C. V208 1ph

Frequency	60Hz
Max power	9kW/DECK
*Average power cons	2,7kWh

Ampère max
25A/DECK (V208 3ph)
44A/DECK (V208 1ph)
Connecting cable for each chamber
10AWG/DECK (V208 3ph)
8AWG/DECK (V208 1ph)
Power supply (optional proofer)
A.C. V(208/240) 1ph 60Hz

Max power	1,8kW
*Average power cons	0,9kWh

Conn. Cable 16AWG – Ampère 7,5A

*** This value is subject to variation according to the way in which the equipment is used**

NOTE: MORETTI FORNI S.P.A. reserves the right to modify the characteristics of the products illustrated in this publication without prior notice

3 baking chambers height 6 1/4”
S100 MODEL (Steel finish)
(assembled with stand height 15 3/4”)

RIGHT SIDE VIEW

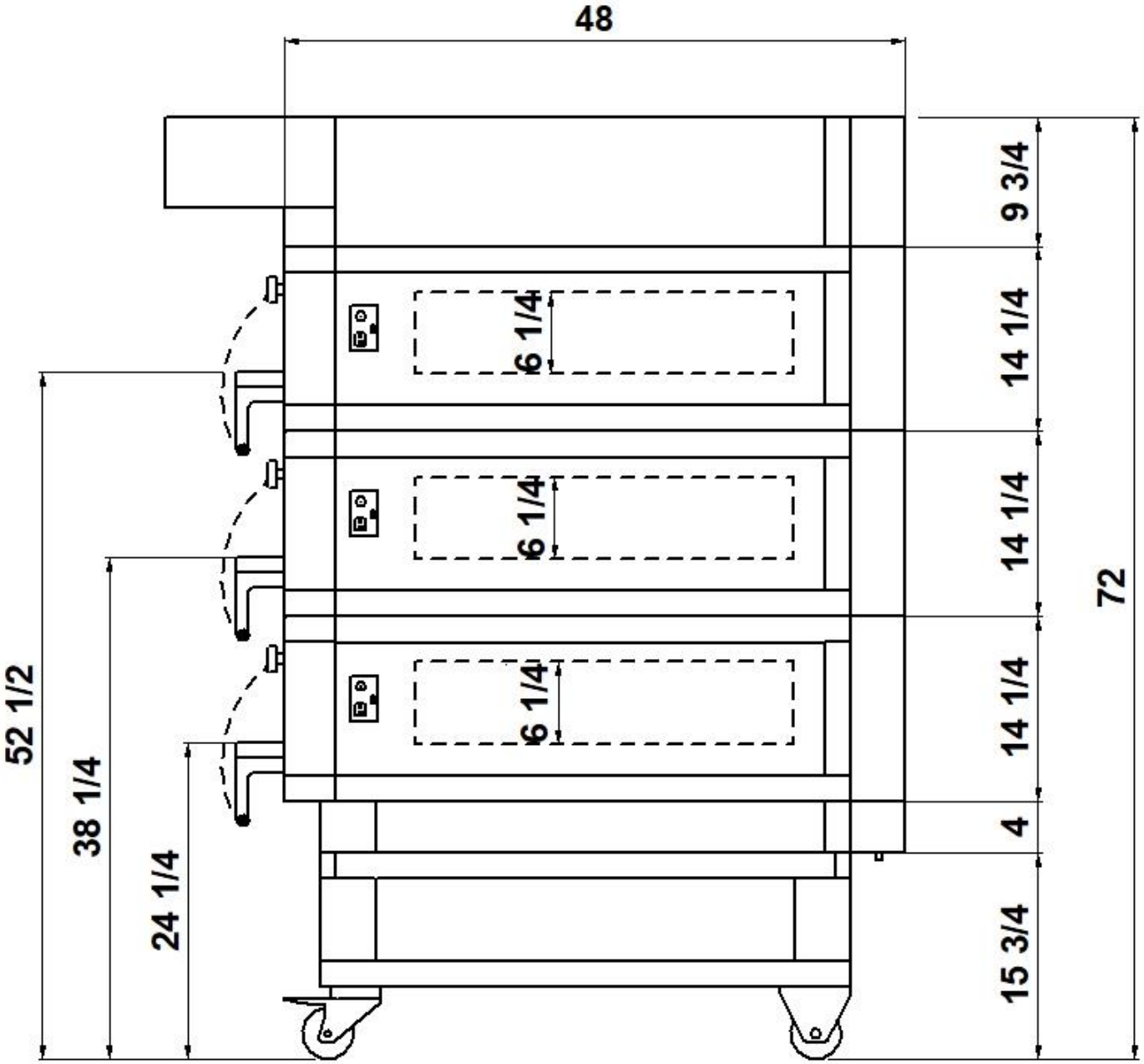

NOTE: The dimensions indicated in the views are in inches.

*** This value is subject to variation according to the way in which the equipment is used**

NOTE: MORETTI FORNI S.P.A. reserves the right to modify the characteristics of the products illustrated in this publication without prior notice

S100

TECHNICAL DATA

SHIPPING INFORMATION H16 (H15 FASTBAKE)		S100E_1_16	S100E_2_16	S100E_3_16
Packed in wooden crate	Height	860mm	1220mm	1580mm
	Icon height	960mm	1320mm	1680mm
	Weight	(234+50)kg	(383+60)kg	(532+70)kg
When combined with prover or Stand	Max. height	1860mm	2070mm	2230mm
	Max. icon height	1940mm	2150mm	2310mm
	Max. weight	(327+60)kg	(476+70)kg	(616+80)kg
SHIPPING INFORMATION H22		**S100E_1_22**	**S100E_2_22**	**S100E_3_22**
Packed in wooden crate	Height	950mm	1400mm	1850mm
	Icon height	1050mm	1500mm	1950mm
	Weight	(247+50)kg	(409+60)kg	(571+70)kg
When combined with prover or Stand	Max. height	1950mm	2250mm	2500mm
	Max. icon height	2030mm	2330mm	2580mm
	Max. weight	(340+60)kg	(502+70)kg	(655+80)kg
SHIPPING INFORMATION STONEBAKE		**S100R_1_16**	**S100R_2_16**	**S100R_3_16**
Packed in wooden crate	Height	860mm	1220mm	1580mm
	Icon height	960mm	1320mm	1680mm
	Weight	(276+50)kg	(467+60)kg	(658+70)kg
When combined with prover or Stand	Max. height	1860mm	2070mm	2230mm
	Max. icon height	1940mm	2150mm	2310mm
	Max. weight	(369+60)kg	(560+70)kg	(742+80)kg

FEEDING AND POWER (REFERRED TO 1 BAKING CHAMBER)	Max power	Multibake	kW	9
	*Average power consumption		kWh	2,7
	Max power	Stonebake	kW	9
	*Average power consumption		kWh	2,9
	Max power	Romanbake (no Fource® Technology)	kW	11,6
	*Average power consumption		kWh	3,5
	Max power	Steambake	kW	8,2
	*Average power consumption		kWh	2,5
	Max power	Pastrybake	kW	6,6
	*Average power consumption		kWh	2,0
	Max power	Fastbake (no Fource® Technology)	kW	11,6
	*Average power consumption		kWh	3,5

MAX TEMPERATURE	Multibake/Stonebake/Romanbake	°C/°F	450°C	842°F
	Steambake		350°C	662°F
	Pastrybake		270°C	518°F
	Fastbake		500°C	932°F

Max power with Fource® Technology on average -20%
Max power with Fource+® Technology (specific for bakery) on average -40%

*** This value is subject to variation according to the way in which the equipment is used**

NOTE: MORETTI FORNI S.P.A. reserves the right to modify the characteristics of the products illustrated in this publication without prior notice