serie P TRADITION

Amalfi C

Modular electric deck oven

2 decks composition

Amalfi consists of one or more independent baking chambers and an optional prover or stand. The baking chamber is entirely made of refractory stone with coiled heating elements inside, allowing the perfect heat distribution over the whole surface. This oven is particularly suitable for direct pizza baking, specific for more delicate toppings and recommended for indirect baking on trays. Temperature management is electronic, power control of ceiling and floor is independent. The oven door is hinged at the bottom, with a tempered glass window to check the product during baking. The stand consists of a painted metal structure, while the prover is a stainless steel cabinet equipped with a heating thermostat. The prover can reach the maximum temperature of 149°F, whereas the maximum temperature of the baking chamber is 842°F.

OPERATION

- Heated by spiral heating elements
- Electronic temperature management with independent adjustment of ceiling and floor
- Maximum temperature reached 842°F
- Continuous temperatures monitoring in baking chamber by thermocouple
- Vapour ducting using manual butterfly valve

CONSTRUCTION

- Structure made in folded stainless steel
- Side panels in painted sheet metal
- Hood in stainless steel
- Steam duct in stainless steel plate
- Stainless steel door, tempered glass
- Refractory top and side structure
- Dual halogen lighting
- Rock wool heat insulation

ACCESSORIES

- Leavening proofer on wheels height 23 1/2”, 31 1/2”
- Stand with wheels height 23 1/2”, 31 1/2”, 37 1/2”
- Spacer element height 11 13/16”
- Additional tray holder guides for compartment and stand
- Self-condensing hood
- Frontless hood

INTERNAL BAKING DIMENSIONS

Internal height	7”
Internal depth	40 1/2”
Internal widht	37 1/4“
Baking surface	10,8ft^2

- 20 customisable programs
- Timer
- Economiser
- Independent maximum temperature safety device

TOP VIEW

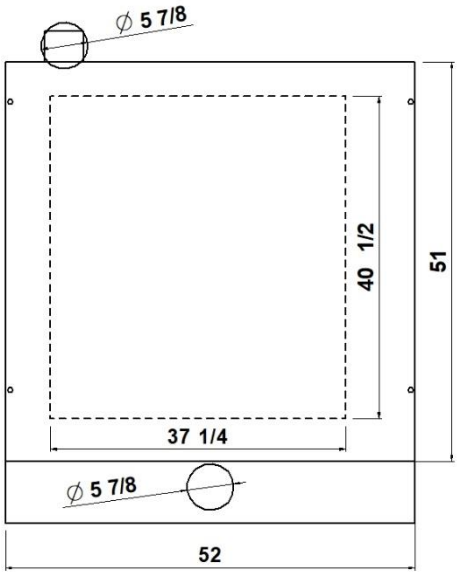

STANDARD EQUIPMENT

1 baking chamber height 7”

(assembled with stand height 37 1/2”)

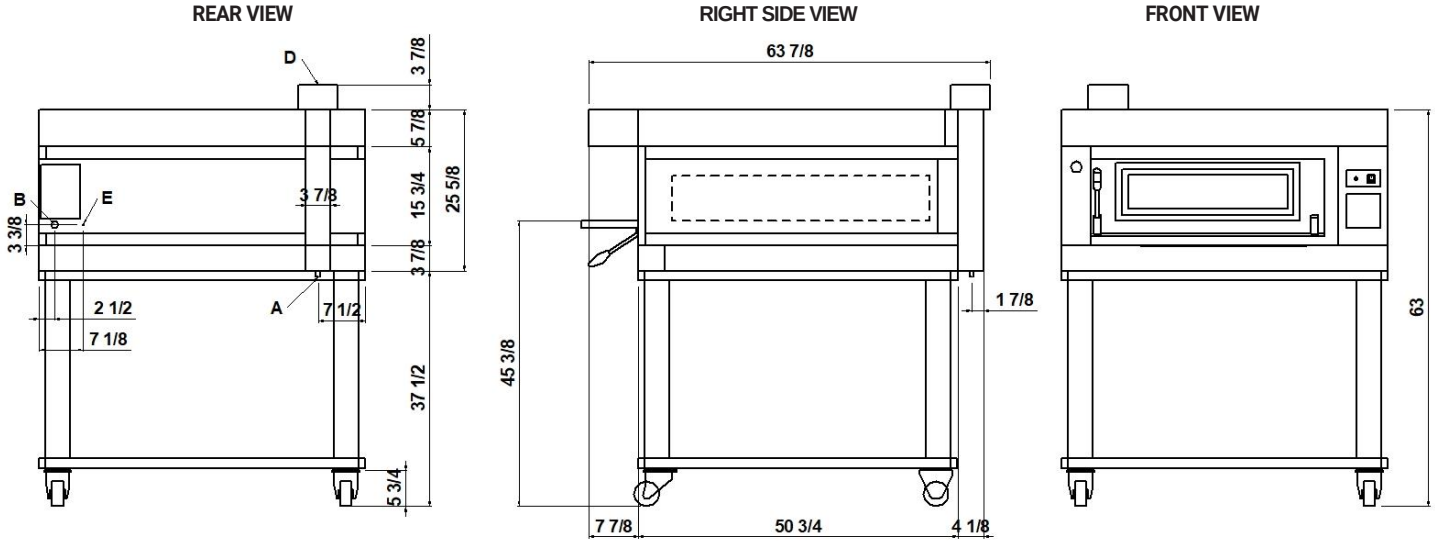

NOTE: The dimensions indicated in the views are in inches.

A	B	D	E
Ø 1/2” condensate exhaust	fairleads	Ø 5 7/8” steam exhaust	M6 equipotential screws

DIMENSIONS

External height	25 5/8” (650mm)
External depth	51” (1290mm)
External width	52” (1320mm)
Weight	602lb (273kg)

TOTAL BAKING CAPACITY

Tray 26”x18” (600x400)mm	3
Pizza diameter 12”	9
Pizza diameter 18”	4

SHIPPING INFORMATION

Packed in wooden crate

Height	36” (900mm)
Depth	73” (1851mm)
Width	60” (1520mm)
Weight	713lb (323kg)

When combined with leavening compartment or stand:

Max height	73” (1850mm)
Max weight	973lb (441kg)

FEEDING AND POWER

Standard feeding
A.C. V208 3ph
Feeding on request
A.C. V240 3ph

Frequency	60Hz
Max power	10,5kW/DECK
*Average power cons	5,3kWh

Ampère max
29,2A/DECK (V208 3ph)
25,3A/DECK (V240 3ph)
Connecting cable for each chamber
9AWG/DECK
Power supply (optional proofer)
A.C. V(208/240) 1ph 60Hz

Max power	1,8kW
*Average power cons	0,9kWh

Conn. Cable 14AWG – Ampère 7,5A

*** This value is subject to variation according to the way in which the equipment is used**

NOTE: MORETTI FORNI S.P.A. reserves the right to modify the characteristics of the products illustrated in this publication without prior notice

serieP TRADITION

Amalfi C

MORETTI FORNI The SmartBaking Company®

2 baking chambers height 7”

(assembled with proofer height 31 1/2“)

REAR VIEW

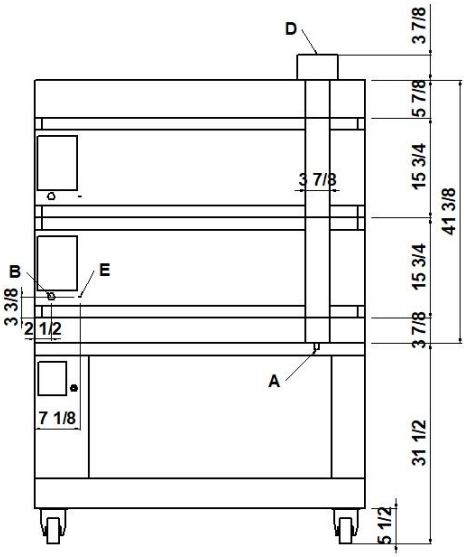

RIGHT SIDE VIEW

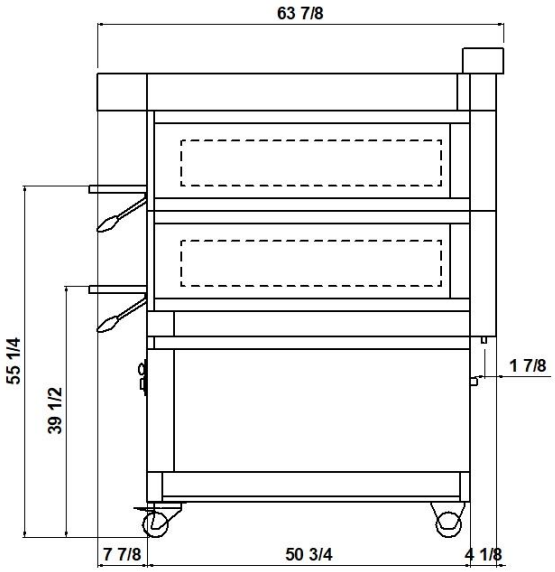

FRONT VIEW

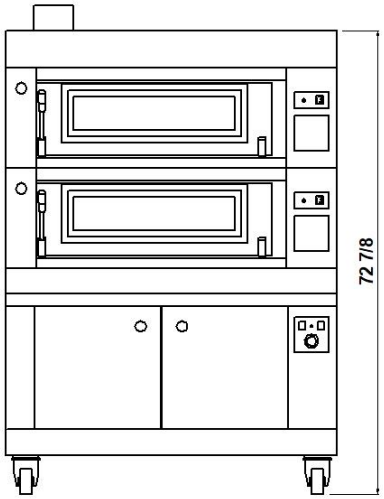

NOTE: The dimensions indicated in the views are in inches.

A	B	D	E
Ø 1/2” condensate exhaust	fairleads	Ø 5 7/8” steam exhaust	M6 equipotential screws

DIMENSIONS

External height	41 3/8” (1050mm)
External depth	51” (1290mm)
External width	52” (1320mm)
Weight	1028lb (466kg)

TOTAL BAKING CAPACITY

Tray 26”x18” (600x400)mm	6
Pizza diameter 12”	18
Pizza diameter 18”	6

SHIPPING INFORMATION

Packed in wooden crate

Height	51 1/2” (1300mm)
Depth	73” (1851mm)
Width	60” (1520mm)
Weight	1160lb (526kg)

When combined with leavening compartment or stand:

Max height	89” (2250mm)
Max weight	1420lb (644kg)

FEEDING AND POWER

Standard feeding
A.C. V208 3ph
Feeding on request
A.C. V240 3ph

Frequency	60Hz
Max power	10,5kW/DECK
*Average power cons	5,3kWh

Ampère max
29,2A/DECK (V208 3ph)
25,3A/DECK (V240 3ph)
Connecting cable for each chamber
9AWG/DECK
Power supply (optional proofer)
A.C. V(208/240) 1ph 60Hz

Max power	1,8kW
*Average power cons	0,9kWh

Conn. Cable 14AWG – Ampère 7,5A

*** This value is subject to variation according to the way in which the equipment is used**

NOTE: MORETTI FORNI S.P.A. reserves the right to modify the characteristics of the products illustrated in this publication without prior notice

serieP TRADITION

Amalfi C

MORETTI FORNI The SmartBaking Company®

3 baking chambers height 7”

(assembled with proofer height 23 1/2”)

REAR VIEW

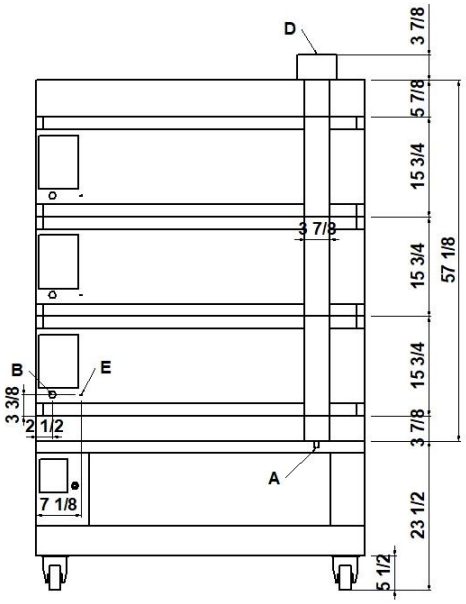

RIGHT SIDE VIEW

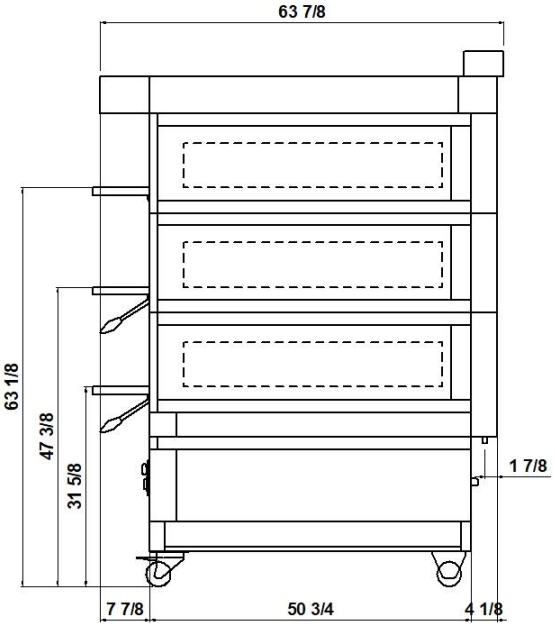

FRONT VIEW

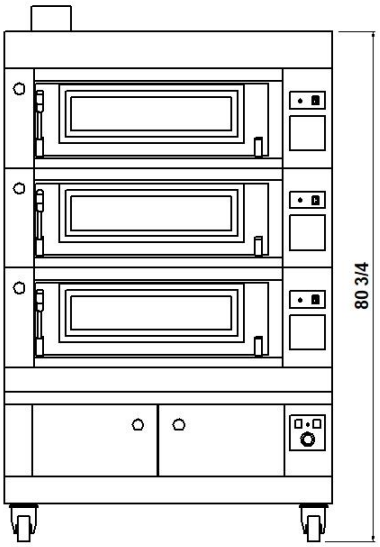

NOTE: The dimensions indicated in the views are in inches.

A	B	D	E
Ø 1/2” condensate exhaust	fairleads	Ø 5 7/8” steam exhaust	M6 equipotential screws

DIMENSIONS

External height	57 1/8” (1450mm)
External depth	51” (1290mm)
External width	52” (1320mm)
Weight	1453lb (659kg)

TOTAL BAKING CAPACITY

Tray 26”x18” (600x400)mm	9
Pizza diameter 12”	27
Pizza diameter 18”	12

SHIPPING INFORMATION

Packed in wooden crate

Height	71” (1800mm)
Depth	73” (1851mm)
Width	60” (1520mm)
Weight	1608lb (729kg)

When combined with leavening compartment or stand:

Max height	109” (2750mm)
Max weight	1868lb (847kg)

FEEDING AND POWER

Standard feeding
A.C. V208 3ph
Feeding on request
A.C. V240 3ph

Frequency	60Hz
Max power	10,5kW/DECK
*Average power cons	5,3kWh

Ampère max
29,2A/DECK (V208 3ph)
25,3A/DECK (V240 3ph)
Connecting cable for each chamber
9AWG/DECK
Power supply (optional proofer)
A.C. V(208/240) 1ph 60Hz

Max power	1,8kW
*Average power cons	0,9kWh

Conn. Cable 14AWG – Ampère 7,5A

*** This value is subject to variation according to the way in which the equipment is used**

NOTE: MORETTI FORNI S.P.A. reserves the right to modify the characteristics of the products illustrated in this publication without prior notice

Amalfi C

TECHNICAL DATA

FEEDING AND POWER (EACH DECK NEEDS TO BE CONNECTED INDEPENDENTLY AND THE LOAD SHOWN BELOW ARE PER DECK)	A.C. V208 3ph 60Hz	Standard feeding	Max power	kW	10,5
			*Medium cons/hour	kWh	5,3
			Ampère Max	A	29,2
			Connecting cable	AWG/DECK	9
	A.C. V240 3ph 60Hz	Feeding on request	Max power	kW	10,5
			*Medium cons/hour	kWh	5,3
			Ampère Max	A/DECK	25,3
			Connecting cable	AWG/DECK	9
	A.C. V208 3ph 60Hz boosted heating elements	Standard feeding	Max power	kW	12,1
			*Medium cons/hour	kWh	6,1
			Ampère Max	A/DECK	33,6
			Connecting cable	AWG/DECK	7
	A.C. V240 3ph 60Hz boosted heating elements	Feeding on request	Max power	kW	12,1
			*Medium cons/hour	kWh	6,1
			Ampère Max	A/DECK	29,1
			Connecting cable	AWG/DECK	7
	A.C. V(208/240) 1ph 60Hz	Proofer	Max power	kW	1,8
			*Medium cons/hour	kWh	0,9
			Ampère Max	A/DECK	7,5
			Connecting cable	AWG/DECK	14

*** This value is subject to variation according to the way in which the equipment is used**

NOTE: MORETTI FORNI S.P.A. reserves the right to modify the characteristics of the products illustrated in this publication without prior notice